TAKEGAWA

◎

☆ ☆

◎
◎
◎
◎
◎
◎
◎
◎
◎
◎
◎

○
○
○
○
○
○
○
○
○
○

⚠

⚠

◎ [illegible]

◎ [illegible]

◎ [illegible]

[illegible]

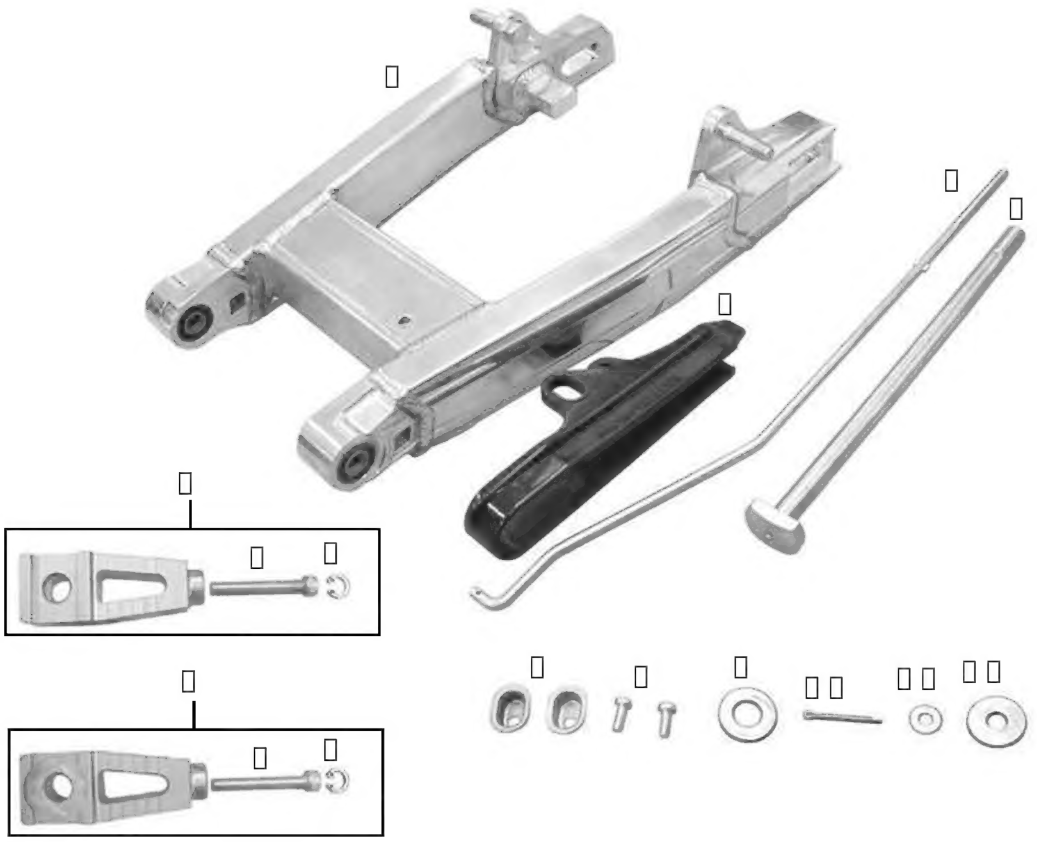

[illegible]	[illegible]	[illegible]	[illegible]	[illegible]
[illegible]	[illegible]	[illegible]	———	
[illegible]	[illegible]	[illegible]	[illegible]-[illegible]-[illegible]	[illegible]
[illegible]	[illegible]	[illegible]		[illegible]
[illegible]	[illegible]	[illegible]		[illegible]
[illegible]	[illegible]	[illegible]	[illegible]-[illegible]-[illegible]	[illegible]
[illegible]	[illegible]	[illegible]	[illegible]-[illegible]-[illegible]	[illegible]
[illegible]	[illegible]	[illegible]	[illegible]-[illegible]-[illegible]	[illegible]
[illegible]	[illegible]	[illegible]	[illegible]-[illegible]-[illegible]	[illegible]
[illegible]	[illegible]	[illegible]	[illegible]-[illegible]-[illegible]	[illegible]
[illegible]	[illegible]	[illegible]	[illegible]-[illegible]-[illegible]	[illegible]
[illegible]	[illegible]	[illegible]	[illegible]-[illegible]-[illegible]	[illegible]
[illegible]	[illegible]	[illegible]	[illegible]-[illegible]-[illegible]	[illegible]

[illegible]	[illegible]	[illegible]	[illegible]-[illegible]-[illegible]	[illegible]
[illegible]	[illegible]	[illegible]	[illegible]-[illegible]-[illegible]	[illegible]

※ [illegible]

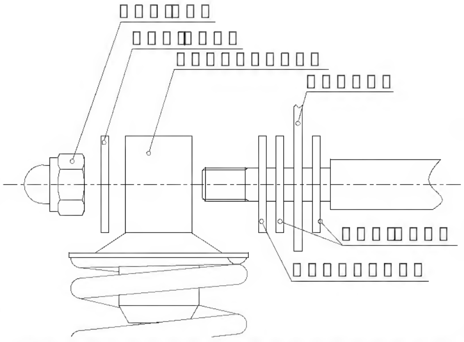

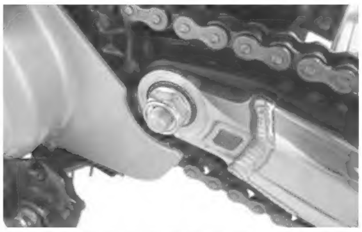

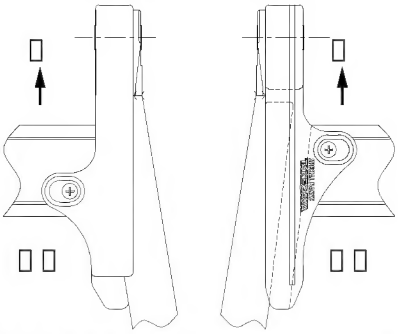

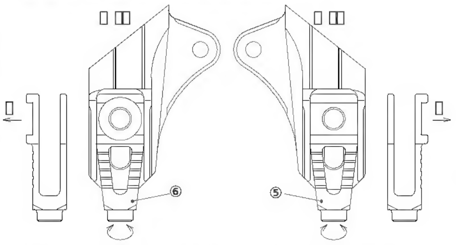

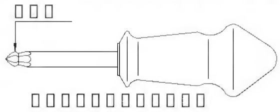

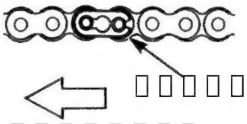

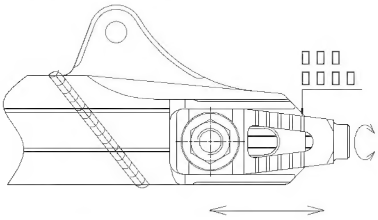

株式会社 SPECIAL PARTS 武川

TEL　FAX

URL　http://www.takegawa.co.jp

Jun./01/'10